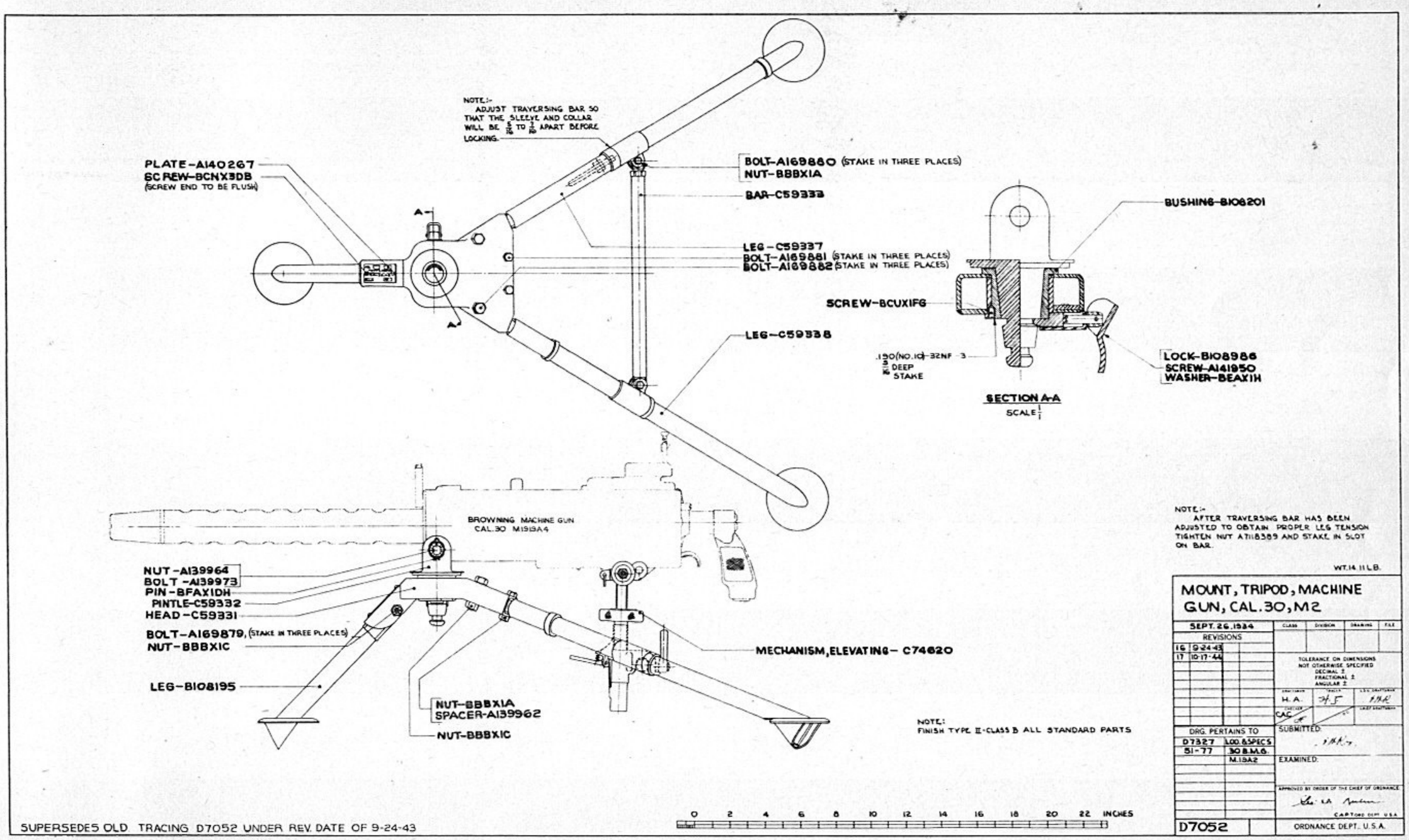
NOTE:-
ADJUST TRAVERSING BAR SO THAT THE SLEEVE AND COLLAR WILL BE 5/16 TO 7/16 APART BEFORE LOCKING.
PLATE-A140267
SCREW-BCNX3DB
(SCREW END TO BE FLUSH)
BOLT-A169880 (STAKE IN THREE PLACES)
NUT-BBBX1A
BAR-C59333
LEG-C59337
BOLT-A169881 (STAKE IN THREE PLACES)
BOLT-A169882 (STAKE IN THREE PLACES)
LEG-C59338
BUSHING-B108201
SCREW-BCUX1FG
.190(NO.10)-32NF-3
3/16 DEEP STAKE
LOCK-B108986
SCREW-A141950
WASHER-BEAX1H
SECTION A-A
SCALE 1/1
BROWNING MACHINE GUN
CAL.30 M1919A4
NUT-A139964
BOLT-A139973
PIN-BFAX1DH
PINTLE-C59332
HEAD-C59331
BOLT-A169879, (STAKE IN THREE PLACES)
NUT-BBBX1C
LEG-B108195
NUT-BBBX1A
SPACER-A139962
NUT-BBBX1C
MECHANISM, ELEVATING- C74620
NOTE:-
AFTER TRAVERSING BAR HAS BEEN ADJUSTED TO OBTAIN PROPER LEG TENSION TIGHTEN NUT A7118389 AND STAKE IN SLOT ON BAR.
WT.14.11 LB.
NOTE:
FINISH TYPE II-CLASS B ALL STANDARD PARTS
0 2 4 6 8 10 12 14 16 18 20 22 INCHES
MOUNT, TRIPOD, MACHINE GUN, CAL.30, M2
SEPT. 26, 1934
REVISIONS
16 9-24-43
17 10-17-44
CLASS
DIVISION
DRAWING
FILE
TOLERANCE ON DIMENSIONS NOT OTHERWISE SPECIFIED
DECIMAL ±
FRACTIONAL ±
ANGULAR ±
H. A.
CAC
DRG. PERTAINS TO
D7327 LOD. & SPECS
51-77 30 B.M.G.
M.19A2
SUBMITTED:
EXAMINED:
APPROVED BY ORDER OF THE CHIEF OF ORDNANCE
CAPT ORD DEPT U.S.A.
D7052
ORDNANCE DEPT. U.S.A.
SUPERSEDES OLD TRACING D7052 UNDER REV. DATE OF 9-24-43

A139964

HEAT TREATMENT & FINAL FINISH	PHYSICAL PROPERTIES					
BLACK NICKEL OR FINISH TYPE III, CLASS A, GRADE 1, OR EQUIVALENT	Y. P.		RED.		SCL.	
	T. S.		BR.			
	EL. 2		ROCK			

JUNE 1, 1934

REVISIONS

14'	4-22-44		

DRG. PERTAINS TO	
D39084	
D39131	
D40771	MED. TANK, M7

DRG. PERTAINS TO	
D7052	MOUNT, TRIPOD M.G. CAL..30, M2
D7135	MOUNT, TRIPOD MACHINE GUN CAL..50, M3
D7371	MOUNT, TRIPOD M1917A1
D7431	CRADLE, 1917A1 MT.
D34218	
D37818	CRADLE, SUB CAL. A.A. M.G. MT., M2A1

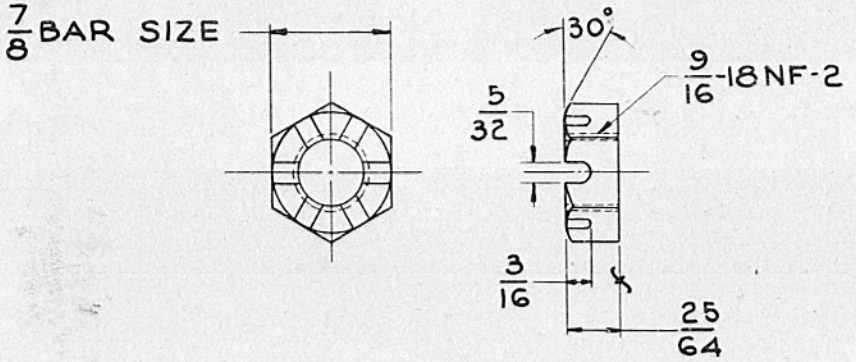

TOLERANCE ON DIMENSIONS NOT OTHERWISE SPECIFIED
DECIMAL: —
FRACTIONAL: 1/64
ANGULAR: 5°

DRAFTSMAN	TRACER	L'D'G DRAFTSMAN
F.W.S.	Meyer	H.M.R.
CHECKER	O.O.	CHIEF DRAFTSMAN

SUBMITTED:
H.M. Roe

APPROVED BY ORDER OF THE CHIEF OF ORDNANCE:
Colonel, ORD. DEPT. U.S.A.

NUT, BOLT, PINTLE (A139964)

STEEL - WD 1020

SUPERSEDES OLD TRACING A139964
UNDER REVISION DATE OF 4-22-44

SCALE 1/1

A 139964

ORDNANCE DEPT., U. S. A.

MADE AT ROCK ISLAND ARSENAL

A139962

HEAT TREATMENT & FINAL FINISH

PHOSPHATE BLACK

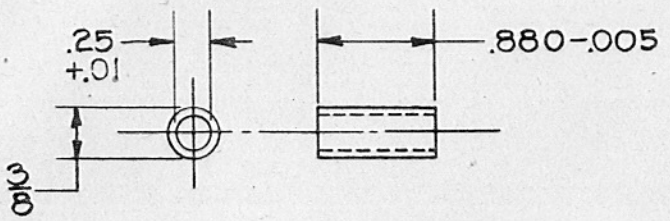

SPACER, HEAD, TRIPOD

SEAMLESS STEEL TUBING. WD1020 (A139962)

TOLERANCE $^{+.01}_{-.01}$ ALLOWED ON ALL DIMENSIONS UNLESS OTHERWISE SPECIFIED.

SCALE 1/1

A139962

PHYSICAL PROPERTIES	
Y. P.	MIN. 40,000
T. S.	MIN. 55,000
EL 2	MIN. 18%
RED.	
HT. T.	
BR.	
SCL	
C C.	

JUNE 1, 1934

REVISIONS

1'	2-18-41		
2²	7-25-42		
3'	10-8-42		

DRG. PERTAINS TO

D7052 MOUNT, TRIPOD MACH. GUN, CAL..30, M2

SYMBOL

DDS615

DRAFTSMAN	TRACER	L'D'G. DRAFTSMAN
F.H.S.		
CHECKER		CHIEF DRAFTSMAN
C.A.C.	H.G.H.	

SUBMITTED:

1ST LIEUT., ORD. DEPT., U. S. A.

APPROVED:

MAJOR, ORD. DEPT., U. S. A.

ORD. OFFICE, WAR DEPT.

A 139973

HEAT TREATMENT & FINAL FINISH	PHYSICAL PROPERTIES					
HEAT TREAT	Y. P.		RED.		SCL.	
	T. S.		BR.			
FINISH TYPE II - CLASS B	EL. 2		ROCK	C25-30		

D 37818 CRADLE, SUB-CAL. A.A. M.G. MT. M2A1

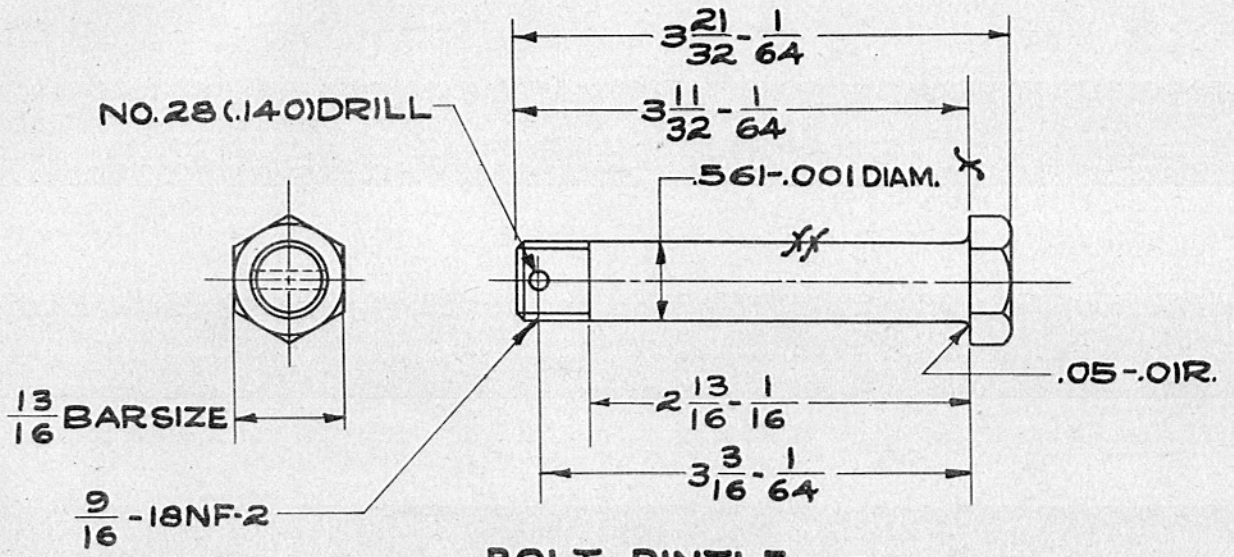

BOLT, PINTLE (A139973)

STEEL WDX1335

SUPERSEDES OLD TRACING A139973
UNDER REV. DATE OF 1-11-45.

SCALE 1/1 | A | 139973

JUNE 1, 1934

REVISIONS

15	1-11-45		

DRG. PERTAINS TO

D 7052	MT., TRIPOD, M.G. CAL. .30 M2
D 7371	MT., TRIPOD M1917A1
D 7135	MT. TRIPOD, M.G. CAL. .50 M3
D 34218	
D 7431	CRADLE, ASSY.

DO
INSCRIBE PART NO.
DO NOT

TOLERANCE ON DIMENSIONS
NOT OTHERWISE SPECIFIED
DECIMAL ± —
FRACTIONAL ± —
ANGULAR ± —

DRAFTSMAN	TRACER	L'D'G DRAFTSMAN
E.R.	B.M.P.	
CHECKER	O.O.	CHIEF DRAFTSMAN

SUBMITTED:
A. W. Roe

APPROVED BY ORDER OF THE CHIEF OF ORDNANCE:
Welton J. Crook
COL. ORD. DEPT., U. S. A.

ORDNANCE DEPT., U. S. A.

MADE AT ROCK ISLAND ARSENAL

A140267

HEAT TREATMENT AND FINAL FINISH

PHOSPHATE BLACK

NOTE:
ALL LETTERING TO BE .15 HIGH

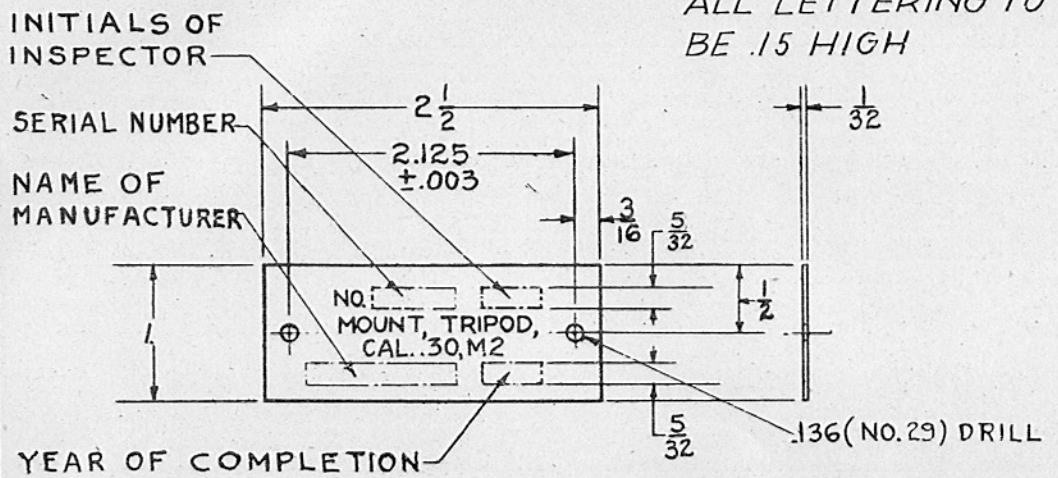

NOTE: PLATE IS TO BE ENGRAVED AS SHOWN AND FILLED IN WITH WHITE ENAMEL.

PLATE, NAME
SHEET STEEL WD1010 (A140267)

TOLERANCE $\pm\frac{.01}{.01}$ ALLOWED ON ALL DIMENSIONS UNLESS OTHERWISE SPECIFIED.

SCALE 1/1

A140267

PHYSICAL PROPERTIES	
Y. P.	
T. S.	
EL-2	
RED.	
HT. T.	
BR.	
SCL.	
C. C.	

JUNE 1, 1934

REVISIONS

1'	7-14-39		
2'	2-20-41		
3'	4-2-41		
4²	9-20-41		
5²	1-27-43		

DRG. PERTAINS TO	
D 7052	MOUNT, TRIPOD, MACH. GUN, CAL. .30, M2

SYMBOL

FAP252

DRAFTSMAN	TRACER	L'D'G. DRAFTSMAN
L.E.S.		

CHECKER	CHIEF DRAFTSMAN
C.A.C.	

SUBMITTED:

1 ST LIEUT., ORD. DEPT., U. S. A.

APPROVED:

MAJOR, ORD. DEPT., U. S. A.

ORD. OFFICE, WAR DEPT.

A 141950

HEAT TREATMENT & FINAL FINISH	PHYSICAL PROPERTIES					
PHOSPHATE BLACK	Y. P.		RED.		SCL.	
	T. S.		BR.			
	EL. 2		ROCK.			

DRG. PERTAINS TO	
D41488	MED. TANK M7

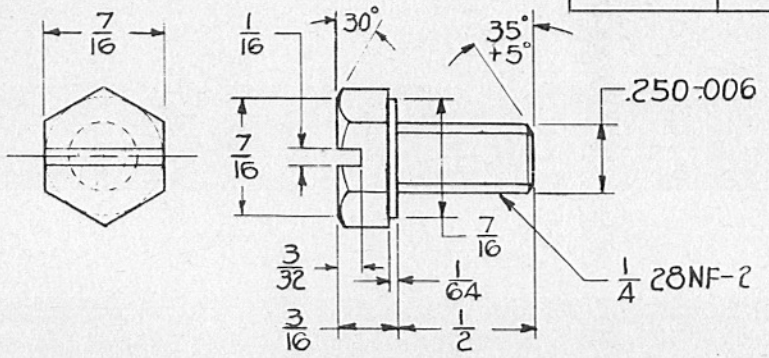

SCREW, PINTLE LOCK HOUSING
STEEL WD1020

TOLERANCE $+\frac{1}{64}$ $-\frac{1}{64}$ ALLOWED ON ALL DIMENSIONS UNLESS OTHERWISE SPECIFIED.

SCALE 2/1

A141950

JUNE 1, 1934

REVISIONS			
1'	2-18-41	5	7-12-43
2'	9-20-41		
3'	3-10-42		
4	12-29-42		

DRG. PERTAINS TO	
D 7052	MOUNT, TRIPOD, MACH. GUN, CAL..30, M 2
D 7135	MOUNT, TRIPOD, MACH. GUN, CAL..50, M 3
D39493	
E4158	
E4183	

SYMBOL

DRAFTSMAN	TRACER	L'D'G DRAFTSMAN
J.I.H.		
CHECKER		CHIEF DRAFTSMAN

SUBMITTED:-

1ST LIEUT., ORD. DEPT., U. S. A.

APPROVED BY ORDER OF THE CHIEF OF ORDNANCE:

MAJOR, ORD DEPT., U. S. A.

ORDNANCE DEPT., U. S. A

A169879

HEAT TREATMENT & FINAL FINISH	PHYSICAL PROPERTIES					
HEAT TREAT PHOSPHATE BLACK	Y. P.		RED.		SCL.	
	T. S.		BR.			
	EL. 2		ROCK.	C 25-30		

DECEMBER 12, 1938

REVISIONS

1²	2-21-41	5'	7-11-42
2²	9-20-41	6	12-29-42
3'	11-27-41		
4²	5-21-42		

DRG. PERTAINS TO

D7052	MOUNT, TRIPOD, M.G., CAL..30, M2

SYMBOL

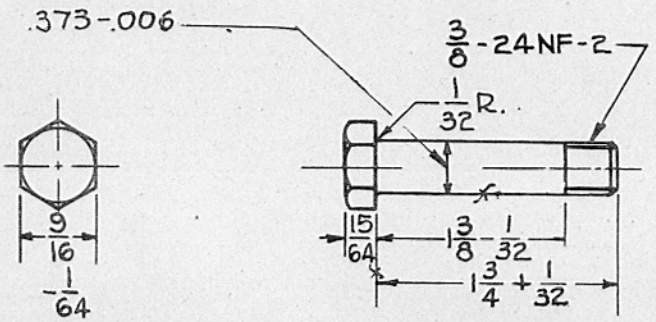

BOLT
STEEL, WDX1335 (A169879-2)

TOLERANCE ± 1/64 ALLOWED ON ALL DIMENSIONS UNLESS OTHERWISE SPECIFIED.

SCALE 1/1

A169879

DRAFTSMAN	TRACER	L'D'G DRAFTSMAN
WCW	WCW	
CHECKER	O.O.	CHIEF DRAFTSMAN
Chkd.		

SUBMITTED:-

MAJ., ORD. DEPT., U. S. A.

APPROVED BY ORDER OF THE CHIEF OF ORDNANCE

S. P. Spalding

LT. COL., ORD. DEPT., U. S. A.

ORDNANCE DEPT., U. S. A.

A169880

HEAT TREATMENT & FINAL FINISH	PHYSICAL PROPERTIES					
HEAT TREAT PHOSPHATE BLACK	Y. P.		RED.		SCL.	
	T. S.		BR.			
	EL. 2		ROCK.	C 25-30		

DECEMBER 12, 1938

REVISIONS

1^2	2-21-41	5^1	7-11-42
2^2	9-20-41	6	12-29-42
3	11-27-41		
4^2	5-21-42		

DRG. PERTAINS TO

D7052	MOUNT, TRIPOD, M.G., CAL..30, M2

SYMBOL

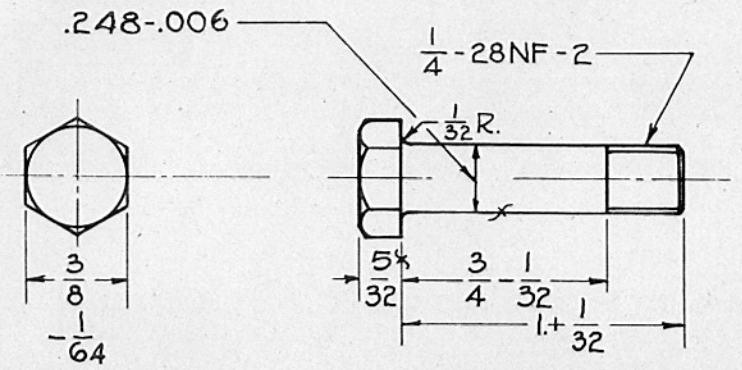

BOLT
STEEL, WD X1335 (A169880-2)

DRAFTSMAN	TRACER	L'D'G DRAFTSMAN
WCW	WCW	
CHECKER		CHIEF DRAFTSMAN
C.H.A.		

SUBMITTED:-

MAJ., ORD. DEPT., U. S. A.

APPROVED BY ORDER OF THE CHIEF OF ORDNANCE:

S. P. Spulding
LT. COL., ORD. DEPT., U. S. A.

ORDNANCE DEPT., U. S. A.

TOLERANCE ± 1/64 ALLOWED ON ALL DIMENSIONS UNLESS OTHERWISE SPECIFIED.

SCALE 2/1

A169880

A169881

HEAT TREATMENT & FINAL FINISH	PHYSICAL PROPERTIES						DECEMBER 12, 1938
HEAT TREAT PHOSPHATE BLACK	Y. P.		RED.		SCL.		REVISIONS
	T. S.		BR.				
	EL. 2		ROCK.	C25-30			

REVISIONS			
1²	2-21-41	5	12-29-42
2'	9-20-41		
3²	5-21-42		
4'	7-11-42		

DRG. PERTAINS TO	
D7052	MOUNT, TRIPOD, M.G., CAL. .30, M2

SYMBOL

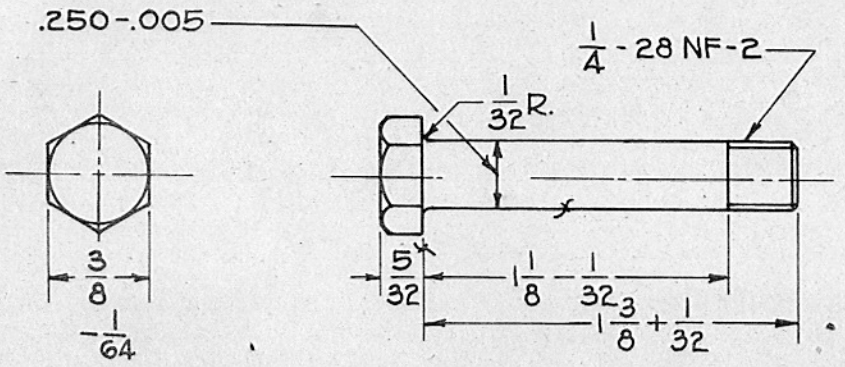

BOLT
STEEL, WD X1335 (A169881)

DRAFTSMAN	TRACER	L'D'G DRAFTSMAN
WCW	WCW	
CHECKER		CHIEF DRAFTSMAN

SUBMITTED:-
MAJ., ORD. DEPT., U. S. A.

APPROVED BY ORDER OF THE CHIEF OF ORDNANCE:
LT. COL., ORD. DEPT., U. S. A.

TOLERANCE ±1/64 ALLOWED ON ALL DIMENSIONS UNLESS OTHERWISE SPECIFIED.

SCALE 2/1

A169881

ORDNANCE DEPT., U. S. A.

A169882

HEAT TREATMENT & FINAL FINISH	PHYSICAL PROPERTIES					
HEAT TREAT PHOSPHATE BLACK	Y. P.		RED.		SCL.	
	T. S.		BR.			
	EL. 2		ROCK.	C 25-30		

DECEMBER 12, 1938

REVISIONS

1²	2-21-41	5'	7-11-42
2²	9-20-41	6	12-29-42
3'	11-27-41		
4²	5-21-42		

DRG. PERTAINS TO

D7052	MOUNT, TRIPOD, M.G., CAL. .30, M2

SYMBOL

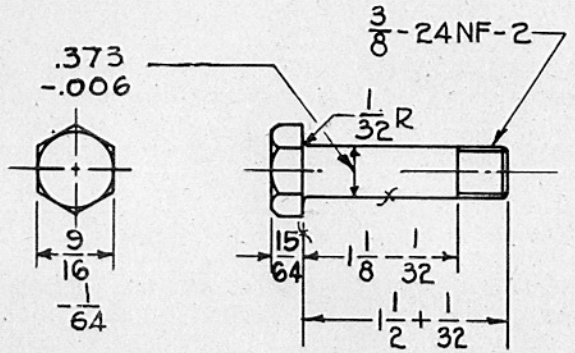

BOLT
STEEL, WDX1335 (A169882-2)

DRAFTSMAN	TRACER	L'D'G DRAFTSMAN
WCW	WCW	
CHECKER	O.O.	CHIEF DRAFTSMAN

SUBMITTED:-

MAJ., ORD. DEPT., U. S. A.

APPROVED BY ORDER OF THE CHIEF OF ORDNANCE:

S. P. Spalding
LT. COL., ORD. DEPT., U. S. A.

TOLERANCE ± 1/64 ALLOWED ON ALL DIMENSIONS UNLESS OTHERWISE SPECIFIED.

SCALE 1/1

A169882

ORDNANCE DEPT., U. S. A.

C SF AD 23-A R-7 R.I.A.—6-10-35—1950

HEAT TREATMENT AND FINAL FINISH
PHOSPHATE BLACK

PHYSICAL PROPERTIES	
Y. P.	
T. S.	
EL. 2	
RED.	
BR.	
ROCK	
SCL.	

JUNE 1, 1934

REVISIONS

6	4-19-43			

DRG. PERTAINS TO

D7052	MOUNT, TRIPOD
	MACHINE GUN
	CAL. 30, M2

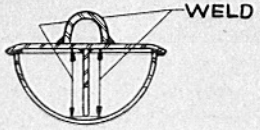

SECTION B-B
SCALE 1/2

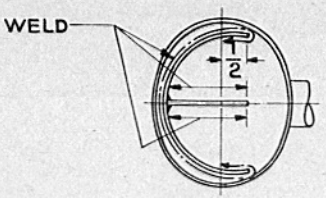

VIEW-A-A
SCALE 1/2

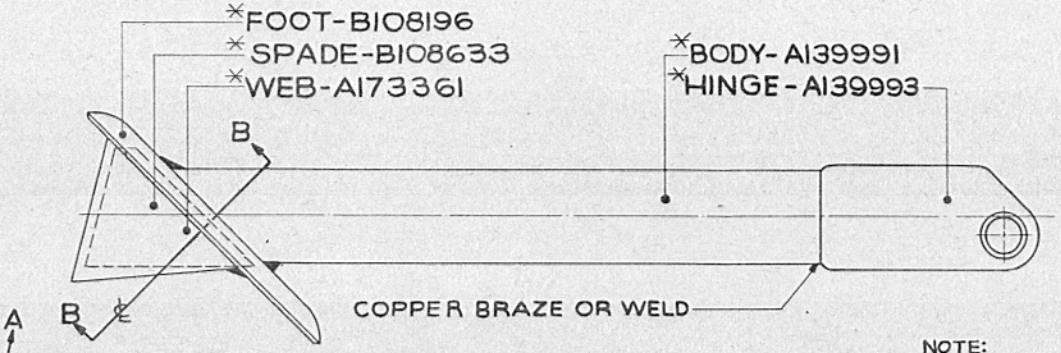

LEG, FRONT, ASSEMBLY

WELDED CONSTRUCTION

*WILL NOT BE ISSUED FOR FIELD MAINTENANCE EXCEPT AS COMPONENTS OF AUTHORIZED ASSEMBLIES

NOTE:
FOR ALT. CONSTRUCTION SEE B108195 A

RETRACED FROM OLD TRACING WITHOUT CHANGE 9-27-43

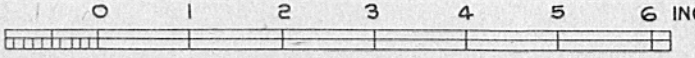

B108195

TOLERANCE ON DIMENSIONS NOT OTHERWISE SPECIFIED
DECIMAL ±
FRACTIONAL ± 1/32
ANGULAR °

DRAFTSMAN	TRACER	L.D.G. DRAFTSMAN
E.R.	H.N.S	A.H.R.
CHECKER		CHIEF DRAFTSMAN
J.F.		

SUBMITTED:
A.H. Roe

APPROVED BY ORDER OF THE CHIEF OF ORDNANCE:
Geo. L. Rice
CAPT., ORD. DEPT. U. S. A.

ORDNANCE DEPT., U. S. A.

MADE AT ROCK ISLAND ARSENAL

HEAT TREATMENT AND FINAL FINISH

PHYSICAL PROPERTIES	
Y. P.	
T. S.	
EL. 2	
RED.	
BR.	163 MIN. AT 3000 KG.
ROCK	
SCL.	

SEPT. 26. 1934

REVISIONS

15	7-18-44			

DRG. PERTAINS TO

D 7052	MT. TRIPOD
	M.G. CAL. .30, M2

NOTE
THE DIMENSION PERTAINING TO THE TAPER ESTABLISHES A MINIMUM AND MAXIMUM METAL SHAPE AND ALL VARIATIONS OF THE TAPER MUST BE WITHIN THOSE LIMITS

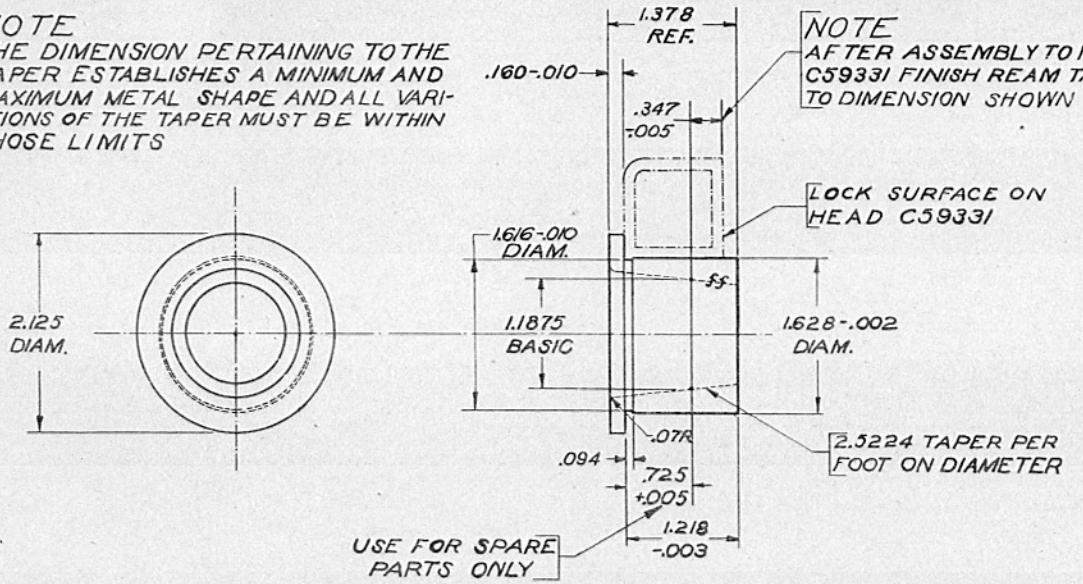

NOTE
AFTER ASSEMBLY TO HEAD C59331 FINISH REAM TAPER TO DIMENSION SHOWN

LOCK SURFACE ON HEAD C59331

2.5224 TAPER PER FOOT ON DIAMETER

BUSHING, PINTLE

ALUMINUM BRONZE CASTING - CLASS B
FINISH f

B108201

TOLERANCE ON DIMENSIONS NOT OTHERWISE SPECIFIED
DECIMAL ± .01
FRACTIONAL ± —
ANGULAR ± —

DRAFTSMAN	TRACER	L'D'G DRAFTSMAN
H.A.C.	P.K.M.	H.H.R.
CHECKED		CHIEF DRAFTSMAN

SUBMITTED:
A. M. Roe

APPROVED BY ORDER OF THE CHIEF OF ORDNANCE:
Walter J. Brooks
COL. ORD. DEPT., U. S. A.

ORDNANCE DEPT., U. S. A.

MADE AT ROCK ISLAND ARSENAL

DO | INSCRIBE PART NO. | B108201

SCALE 1/1

SUPERSEDES OLD TRACING B108201
UNDER REVISION DATE OF JULY 18, 1944

HEAT TREATMENT AND FINAL FINISH

PHYSICAL PROPERTIES	
Y. P.	
T. S.	
EL. 2	
RED.	
BR.	
ROCK	
SCL.	

JAN. 2, 1935

REVISIONS

4	7-26-43			
5	10-8-44			

DRG. PERTAINS TO

D7431	CRADLE
D7371	MOUNT, TRIPOD, M1917A1
D7052	MT, TRIPOD, M.G
	CAL..30, M2
D39493	
E4158	
E4183	
D34914	
D30271	
D41488	MED. TANK, M7

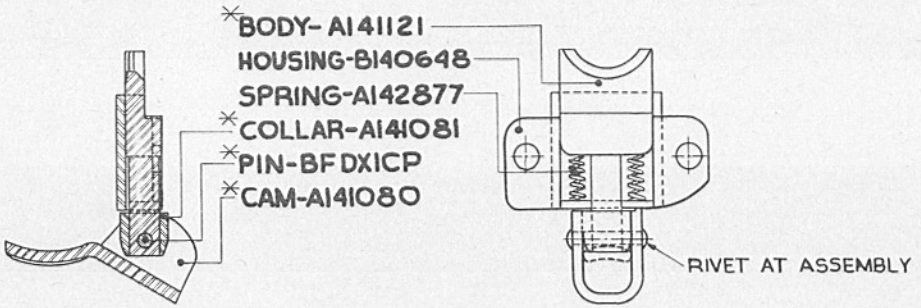

LOCK, PINTLE, GROUP ASSEMBLY

*WILL NOT BE ISSUED FOR FIELD MAINTENANCE EXCEPT AS COMPONENTS OF AUTHORIZED ASSEMBLIES.

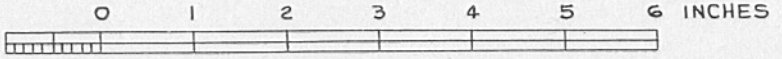

RETRACED FROM OLD TRACING WITHOUT CHANGE 9-29-43

B108986

TOLERANCE ON DIMENSIONS NOT OTHERWISE SPECIFIED
DECIMAL ±
FRACTIONAL ±
ANGULAR ±

DRAFTSMAN	TRACER	L'D'G DRAFTSMAN
R.F.D	HNS	
CHECKER		CHIEF DRAFTSMAN
J.F.		

SUBMITTED:

APPROVED BY ORDER OF THE CHIEF OF ORDNANCE

CAPT. ORD. DEPT., U. S. A.

ORDNANCE DEPT., U. S. A.

MADE AT ROCK ISLAND ARSENAL

NUT, HEXAGON, NF-2
REGULAR, SEMI-FINISHED

BBBX1

ORDNANCE STANDARD (COMMERCIAL)

APPROVED HBH 7-10-31 DATE

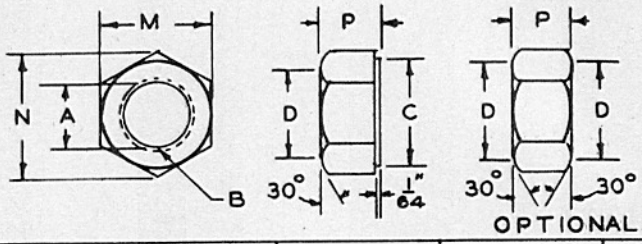

A	Diameter, Nominal / Major Thd. Diameter Min.	1/4 / .2500	5/16 / .3125	3/8 / .3750	7/16 / .4375	1/2 / .5000
B	Threads Per Inch	28	24	24	20	20
M	Width Across Flats — Nom.	7/16	9/16	5/8	3/4	13/16
	Max.	.4375	.5625	.6250	.7500	.8125
	Min.	.425	.547	.606	.728	.788
N	Across Corners Min.	.485	.624	.691	.830	.898
P	Thickness — Nom.	13/64	1/4	5/16	23/64	27/64
	Max.	.219	.267	.330	.378	.442
	Min.	.187	.233	.294	.340	.402
	Material and Finish	Ordnance Part Number - Standard				
	Steel, Commercial Plain Finish Cadmium or Zinc Plated Seez Pruf Thd. Coated	218563 218584 503121	218564 221157 503122	218565 225831 503123	218570 218585 503124	218571 214267 503125
	Steel, Alloy Plain Finish	218579	218580	218581	218582	218583
	Brass, Commercial Plain Finish	218586	218588	218589	218593	218594
	Material and Finish	Ordnance Part Number - Limited Standard				
	Steel, Commercial Tin Plated Black Oxide Coated			426098 503257		

Material:
Steel, Commercial, Min. Rockwell Hardness B-78.
Steel, Alloy in accordance with Drawing AEAX8.
Brass, Commercial.

Dimensions in inches

Note: Alloy Steel Nuts shall be stamped with the letter H on one side of the hexagon.

Example for Ordering: Nut, Hex, Steel, Semi-Finished, (Plain), 1/4"-28NF-2, Drg. BBBX1, Part No. 218563.

Reference: A.S.A. B18.2-1941.

Note: Diameter of washer face C = M Max. -5%. Diameter of top circle D = M Max. -15%.

SUPERSEDES OLD TRACING BBBX1 UNDER REVISION DATE OF 10-13-44

REVISION (7) 10-13-44

SCREW, MACHINE, BRASS
ROUND HEAD, NC-2

BCNX3

ORDNANCE STANDARD (COMMERCIAL)

APPROVED 7-27-31 DATE

*TOLERANCES ON LENGTH (L)= -3 PER CENT BUT NOT LESS THAN .025 INCH.

ROUND HEAD MACHINE SCREWS ARE SHOWN ON DRGS BCNX1, 1.1, 1.2, 1.3, 1.4, 1.5, 2, 2.1, 2.2, 2.3, 2.4, 2.5, 2.6, 3, 4, 5, 6

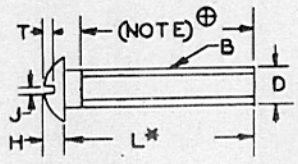

THE UNTHREADED BODY DIAMETER SHALL HAVE THE SAME TOLERANCES AS THE PITCH DIAMETER OF THE THREADS SHOWN IN THE AMER. NAT. STD. FOR SCREW THREADS WHERE THE NUMBER OF THREADS PER INCH ARE THE SAME.

		#2	#3	#4	#5	#6	#8
D	Diam. of Screw — Nom.	#2	#3	#4	#5	#6	#8
	Max.	.0860	.0990	.1120	.1250	.1380	.1640
	Min.	.0820	.0946	.1072	.1202	.1326	.1586
B	Thds. per Inch	56	48	40	40	32	32
A	Head Diam. — Max.	.162	.187	.211	.236	.260	.309
	Min.	.146	.169	.193	.217	.240	.287
H	Head Height — Max.	.070	.078	.086	.095	.103	.119
	Min.	.059	.067	.075	.083	.091	.107
J	Slot Width — Max.	.036	.038	.040	.043	.045	.050
	Min.	.024	.026	.028	.031	.033	.037
T	Slot Depth — Max.	.048	.053	.058	.062	.067	.076
	Min.	.036	.040	.043	.047	.050	.057

L Length	Ordnance Part Number, Plain Finish					
1/8	421710	421720	133207	421730	133221	121747
3/16	421711	421721	133209	421731	120781	100957
1/4	421712	421722	114793	178407	100944	114741
5/16	421713	421723	117626	421732	115574	100958
3/8	421714	421724	117617	421733	100945	133237
7/16	421715	421725	133212	421734	133224	100959
1/2	421716	421726	117618	421735	100946	100960
5/8	421717	421727	117619	421736	100947	100961
3/4	421718	421728	117620	421737	100948	100962
7/8	421719	421729	117621	421738	100949	100963
1			117622	421739	100950	100964
1-1/8			117623	421740	100951	100965
1-1/4			117624	421741	100952	100967
1-1/2			117625	421742	100954	100968
1-3/4				421743	100955	100969
2				421744	100956	133243
2-1/4						133245
2-1/2						133247
2-3/4						133249
3						

L Length	Ordnance Part Number, Tin Plated					
3/8					224198	
7/16					227212	
5/8					227399	

L Length	Ordnance Part Number, Cadmium or Zinc Plated					
1-1/2						186803

MATERIAL: Brass, Commercial

DIMENSIONS IN INCHES

EXAMPLE FOR ORDERING: Screw, Machine, Steel, Round Hd., (Plain Finish), #2(.086)-56NC-2x1/2", Drg. BCNX3, Part Number 421710.

⊕ NOTE: On Machine Screws 2" long or shorter, the complete threads shall extend to within two threads from the bearing surface of the head. Longer lengths shall have a minimum complete thread length of 1-3/4".

SUPERSEDES OLD TRACING BCNX3 UNDER REVISION DATE OF 6-13-44

REVISION ③ 6-13-44

SUPERSEDES OLD TRACING BCUX1 UNDER REVISION DATE OF 11-17-42

STANDARD BOOK NO. 75-1

SCREW, HEADLESS, FLAT POINT, NF-3 — BCUX 1

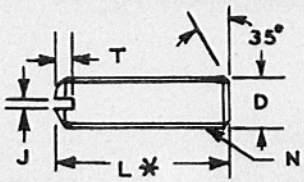

* Tolerance on length "L" minus 3% but not less than minus .010"

Note: Screws shall be threaded the entire length of the screw.

NF-3 (Fine Thread, Medium Fit, Class 3)

		#1	#2	#5	#8	#10
D	Diameter of Screw Nom.					
	Max.	.0730	.0860	.1250	.1640	.1900
	Min.	.0694	.0822	.1204	.1590	.1846
N	Threads per inch	72	64	44	36	32
J	Slot Width Max.	.020	.020	.036	.044	.055
	Min.	.016	.016	.032	.040	.051
T	Slot Depth Max.	.020	.025	.035	.043	.050
	Min.	.015	.020	.030	.038	.045
Thkns. of slotting Cutter		.016	.016	.032	.040	.051

L Length	Piece-Mark - To be preceded by BCUX1														
	#1 Type			#2 Type			#5 Type			#8 Type			#10 Type		
	1	2	3	1	2	3	1	2	3	1	2	3	1	2	3
1/16	BA	HA	AA	CA											
3/32	BB	HB	AB	CB	KB	DB	EB	MB	GB						
1/8	BC	HC	AC	CC	KC	DC	EC	MC	GC	PC	QC	LC	FC		
5/32	BD	HD	AD	CD	KD	DD	ED	MD	GD	PD	QD	LD	FD	ND	RD
3/16	BE	HE	AE	CE	KE	DE	EE	ME	GE	PE	QE	LE	FE	NE	RE
1/4	BF	HF	AF	CF	KF	DF	EF	MF	GF	PF	QF	LF	FF	NF	RF
5/16				CG	KG	DG	EG	MG	GG	PG	QG	LG	FG	NG	RG
3/8				CH	KH	DH	EH	MH	GH	PH	QH	LH	FH	NH	RH
1/2													FK	NK	RK

Material: Type 1, 2, or 3 as ordered. Dimensions in inches.

Type 1 - Steel, Corrosion Resisting, Grade "7D", Specification QQ-S-763.

Type 2 - Brass, Half-Hard, Composition "B", Specification QQ-B-611.

Type 3 - Steel, WD1035, Specification 57-107.

Example for ordering: Screw, Headless, Flat Point, Type 2, Brass, #8-36NF-3 x 1/4" BCUX1QF

ORDNANCE STANDARD (ORDNANCE DESIGN)

DATE APPROVED 7-30-31 © 11-17-42

WASHER, LOCK, "TOOTH" TYPE
INTERNAL TOOTH

BEAXI

ORDNANCE STANDARD (COMMERCIAL)

HBH APPROVED 5-11-33 DATE

NOTE: EITHER TYPE A OR TYPE B IS ACCEPTABLE.

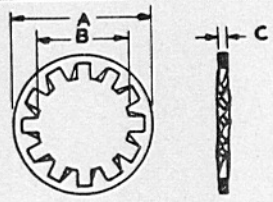

TYPE A

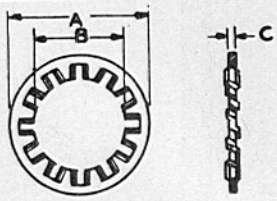

TYPE B

SIZE, NOMINAL		#2	#3	#4	#5	#6	#8
A OUTSIDE DIAMETER	MAX.	.200	.232	.270	.280	.295	.340
	MIN.	.175	.215	.255	.245	.275	.325
B INSIDE DIAMETER	MAX.	.095	.109	.123	.136	.150	.176
	MIN.	.089	.102	.115	.120	.141	.168
C THICKNESS	MAX.	.015	.019	.019	.021	.021	.023
	MIN.	.010	.012	.015	.017	.017	.018
MATERIAL AND FINISH		ORDNANCE PART NUMBER					
STEEL PLAIN		190638	178835	116042	180156	115543	115544
STEEL CADMIUM OR ZINC PLATED		188131	179162	138522	147755	138526	138530
STEEL NICKEL PLATED		180088	180135	118937	180184	118924	118925
STEEL CHROMIUM PLATED		180049	180133	138523	180182	138527	138531
STEEL PHOSPHATE COATED		180090	180154	138524	180186	138528	138166
PHOSPHOR BRONZE PLAIN		221117	228809	228810	228821	190669	190670
PHOSPHOR BRONZE TINNED		424227	424219	424220	424221	219891	225843

SIZE, NOMINAL		#10	#12	#14 & 1/4	5/16	3/8	
A OUTSIDE DIAMETER	MAX.	.381	.410	.478	.610	.692	
	MIN.	.365	.394	.460	.594	.670	
B INSIDE DIAMETER	MAX.	.204	.231	.267	.332	.398	
	MIN.	.195	.221	.256	.320	.384	
C THICKNESS	MAX.	.025	.025	.028	.034	.040	
	MIN.	.020	.020	.023	.028	.032	
MATERIAL AND FINISH		ORDNANCE PART NUMBER					
STEEL PLAIN		115545	115546	115547	115548	115549	
STEEL CADMIUM OR ZINC PLATED		121801	125774	120423	138538	138542	
STEEL NICKEL PLATED		118926	118927	118928	118929	118930	
STEEL CHROMIUM PLATED		138533	125775	138536	138539	138543	
STEEL PHOSPHATE COATED		138534	138181	138167	138540	138544	
PHOSPHOR BRONZE PLAIN		190672	228832	228834	190676	228847	
PHOSPHOR BRONZE TINNED		424222	424223	424224	424225	424226	

DIMENSIONS IN INCHES

MATERIAL:
STEEL - SAE 1050 OR 1066 HEAT TREATED, ROCKWELL HARDNESS C40-C50 OR EQUIVALENT.
PHOSPHOR BRONZE - SPECIFICATION QQ-B-746.

NOTE: FOR SPECIFICATIONS SEE DRG. BEAX10.
EXAMPLE FOR ORDERING: WASHER, LOCK, TOOTH TYPE, STEEL, 3/8" (PLAIN), DRG. BEAX1, ORD. PART NO. 115549.

SUPERSEDES OLD TRACING BEAXI UNDER REVISION DATE OF 5-6-44

REVISION ⑤ 5-6-44 ⑥ 10-3-44

SUPERSEDES OLD TRACING BFAXI UNDER REVISION DATE OF 4-22-44

PIN, COTTER

BFAXI

ORDNANCE STANDARD (COMMERCIAL)

APPROVED HSH 9-5-28 DATE

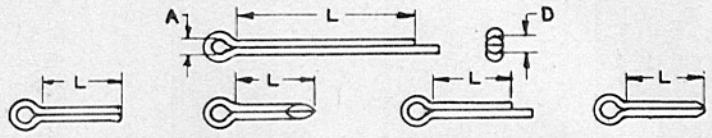

STANDARD MITRE END EXTENDED PRONG BEVEL POINT

OPTIONAL DESIGNS

COTTER PIN DIAMETER	NOM.	1/16	3/32	7/64	1/8	5/32
	MAX.	.061	.090	.1064	.122	.150
	MIN.	.058	.086	.1024	.118	.146
A EYE DIAMETER		1/16	3/32	7/64	1/8	5/32

L LGTH	FINISH	ORDNANCE PART NUMBER				
5/16	PLAIN	137124				
	PLATED *	137127				
	PHOSPHATE	137128				
3/8	PLAIN	112526	112527		112528	112529
	PLATED*	119981				187609
	PHOSPHATE	189789				
7/16	PLAIN	137130				
	PLATED*	137133				
	PHOSPHATE	137134				
1/2	PLAIN	103361	103372		103383	103394
	PLATED*	112726	119117		137946	
	PHOSPHATE	137137	137155			
5/8	PLAIN	107761	107762		107763	107764
	PLATED*	137141	137159			
	PHOSPHATE	137142	137160			
3/4	PLAIN	103362	103373	141405	103384	103395
	PLATED*	121223	121222		177923	
	PHOSPHATE	137146	137164			
	STAINLESS STEEL		220257			
7/8	PLAIN	108628	108629		108630	108631
	PLATED*	137150	137168		137180	
	PHOSPHATE	137151	137169		137181	
1	PLAIN	103363	103374		103385	103396
	PLATED*	179252	121224		137185	120169
	PHOSPHATE	189799	137171		137186	138179
1-1/8	PLAIN	108634	108636		108635	108637
	PLATED*	187943	137175		137190	
	PHOSPHATE		137176		137191	
1-1/4	PLAIN	103364	103375		103386	103397
	PLATED*		119120		120123	137218
	PHOSPHATE	189797	189796		137195	137219
1-3/8	PLAIN	108640	108642		108641	108643
	PLATED*				137199	137223
	PHOSPHATE				137200	137224
1-1/2	PLAIN	103365	103376		103387	103398
	PLATED*				137204	137228
	PHOSPHATE				137205	137229

L LGTH	FINISH	ORDNANCE PART NUMBER				
1-5/8	PLAIN	119207	119208		119209	119210
	PLATED*				137209	137233
	PHOSPHATE				137210	137234
1-3/4	PLAIN	103366	103377		103388	103399
	PLATED*				137214	137238
	PHOSPHATE				120437	137239
1-7/8	PLAIN	119176	119177		119128	119178
	PLATED*					
	PHOSPHATE					
2	PLAIN	103367	103378		103389	103400
	PLATED*				125637	137243
	PHOSPHATE					137244
2-1/4	PLAIN	103368	103379		103390	103401
	PLATED*					137248
	PHOSPHATE					137249
2-1/2	PLAIN	103369	103380		103391	103402
	PLATED*					
	PHOSPHATE					
2-3/4	PLAIN	103370	103381		103392	103403
	PLATED*					
	PHOSPHATE					
3	PLAIN	103371	103382		103393	103404
	PLATED*					
	PHOSPHATE					
3-1/4	PLAIN				120466	
	PLATED*					
	PHOSPHATE					
3-1/2	PLAIN				121221	
	PLATED*					
	PHOSPHATE					
3-3/4	PLAIN					187319
	PLATED*					
	PHOSPHATE					
4	PLAIN					
	PLATED*					
	PHOSPHATE					

MATERIAL: STEEL, COMMERCIAL.

DIMENSIONS IN INCHES.

EXAMPLE FOR ORDERING: PIN, COTTER, 1/8" x 1", DRG. BFAX1, ORD. PART NO. 103385, (PLAIN).

* PLATED COTTER PINS MAY BE EITHER CADMIUM, ZINC, OR NICKEL-BRIGHT.

REVISIONS (12) 4-22-44 (13) 6-29-44

HEAT TREATMENT AND FINAL FINISH

PHOSPHATE BLACK

PHYSICAL PROPERTIES	
Y. P.	
T. S.	
EL. 2	
RED.	
BR.	
ROCK.	
SCL.	

JUNE 1, 1934

REVISIONS

12	5-3-43		13	2-21-44	
14	4-3-44				

DRG. PERTAINS TO

D7052	MOUNT, TRIPOD
	MACH. GUN
	CAL. .30, M2

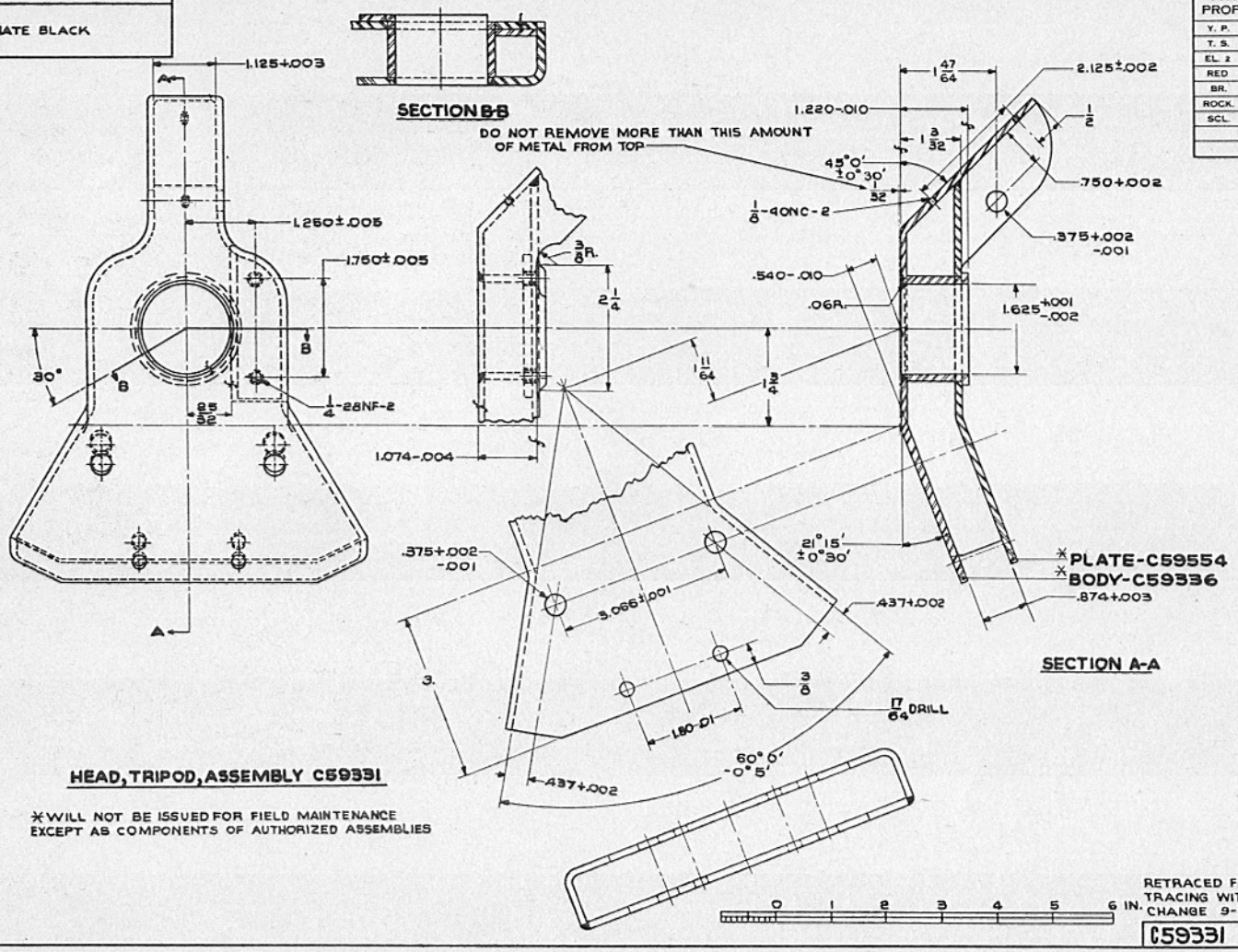

HEAD, TRIPOD, ASSEMBLY C59331

*WILL NOT BE ISSUED FOR FIELD MAINTENANCE EXCEPT AS COMPONENTS OF AUTHORIZED ASSEMBLIES

RETRACED FROM OLD TRACING WITHOUT CHANGE 9-27-43

TOLERANCE ON DIMENSIONS NOT OTHERWISE SPECIFIED
DECIMAL ±—
FRACTIONAL ± 1/64
ANGULAR ±—

DRAFTSMAN	TRACER	CHIEF DRAFTSMAN
KASCH	HNS	
CHECKER		
GF		

SUBMITTED:

APPROVED BY ORDER OF THE CHIEF OF ORDNANCE:

CAPT. ORD. DEPT. U. S. A.

ORDNANCE DEPT., U. S. A.

C59331

MADE AT ROCK ISLAND ARSENAL

HEAT TREATMENT AND FINAL FINISH
HEAT TREAT BEFORE MACHINING
FINISH TYPE III - CLASS A - GRADE I

PHYSICAL PROPERTIES	
Y. P.	
T. S.	
EL. 2	
RED	
BR.	
ROCK.	C20-25
SCL.	

JUNE 1, 1934

REVISIONS	
19	8-11-44
20	9-30-44
21	11-4-44

DRG. PERTAINS TO	
D7052	MT., TRIPOD, M.G., CAL. .30 M2
D7135	MT., TRIPOD, M.G., CAL. .50 M3
D34218	
D36960	

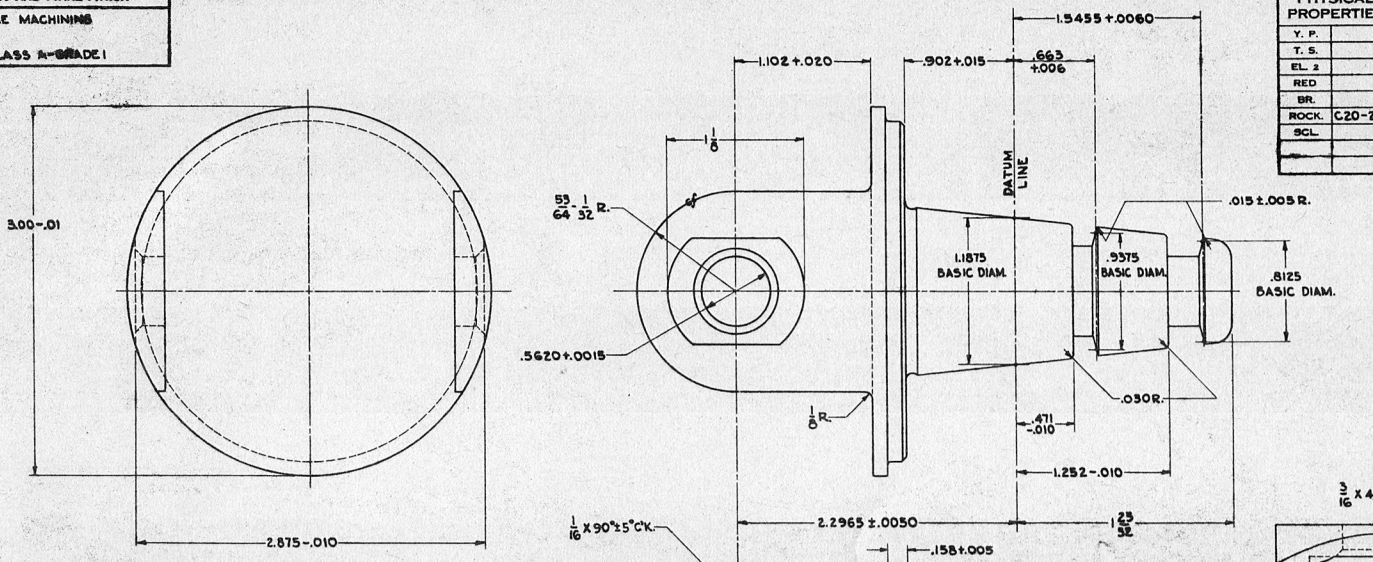

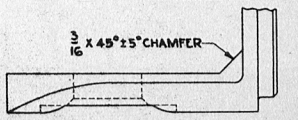

ALTERNATIVE DESIGN

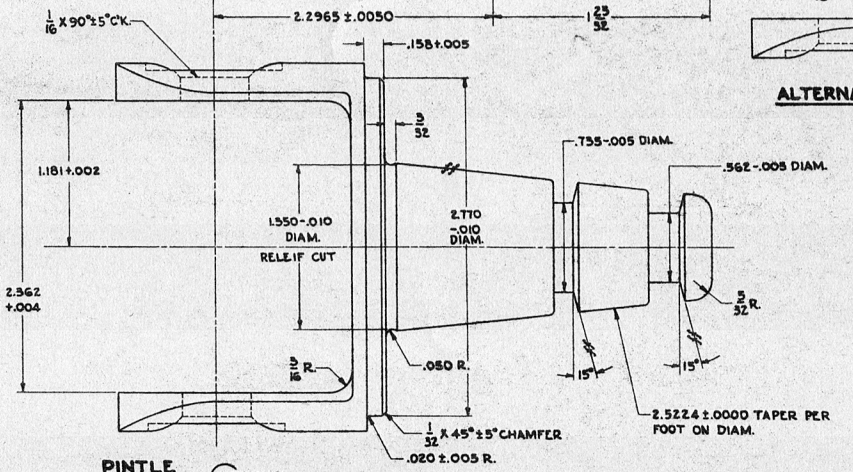

NOTE:-
THE DIMENSIONS PERTAINING TO THE TAPER AND GROOVE ANGLES ESTABLISH A MINIMUM AND MAXIMUM METAL SHAPE AND ALL VARIATIONS OF THE TAPERS MUST BE WITHIN THOSE LIMITS.

THE CENTER LINE OF HOLES SHALL BE SQUARE WITH CENTER LINE OF TAPER WITHIN ±.0012 PER INCH WHEN REFERRED TO THE INTERSECTION OF CENTER LINES.

BREAK ALL SHARP EDGES 1/32

PINTLE
STEEL WD 1035
FINISH "f"

C59332 DO INSCRIBE PART NO.

SUPERSEDES OLD TRACINGS A235312, B222504 & C59332 UNDER REVISION DATE OF 8-11-44.

SCALE 2/1 | C 59332

TOLERANCE ON DIMENSIONS NOT OTHERWISE SPECIFIED
DECIMAL ± .010
FRACTIONAL ± 1/64
ANGULAR ± —

DRAFTSMAN	TRACER	L'D'D DRAFTSMAN
CHECKED		CHIEF DRAFTSMAN

SUBMITTED:
A.H. Roe

APPROVED BY ORDER OF THE CHIEF OF ORDNANCE:
Wilton J. Crook
COL. ORD. DEPT. U. S. A.

ORDNANCE DEPT., U. S. A.

MADE AT ROCK ISLAND ARSENAL

HEAT TREATMENT AND FINAL FINISH

PHYSICAL PROPERTIES	
Y. P.	
T. S.	
EL. 2	
RED	
BR.	
ROCK.	
SCL.	

SEPTEMBER 26, 1934

REVISIONS			
13	10-17-44		

DRG. PERTAINS TO	
D7052	MT., TRIPOD
	MACH. GUN
	CAL. .30, M2

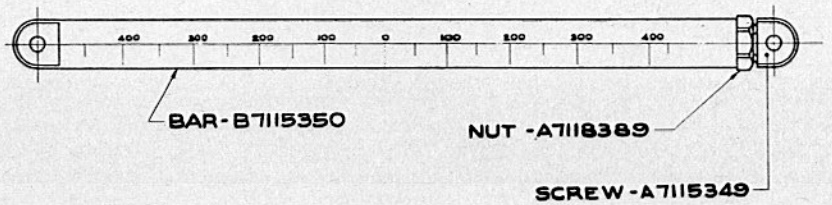

BAR, TRAVERSING, ASSEMBLY (C59333)

SUPERSEDES OLD TRACINGS B7115351 & C59333 UNDER REVISION DATE OF 10-17-44.

0 1 2 3 4 5 6 7 8 9 10 11 12 INCHES

DO / DO NOT INSCRIBE PART NO.

C59333

TOLERANCE ON DIMENSIONS NOT OTHERWISE SPECIFIED
DECIMAL ± —
FRACTIONAL ± —
ANGULAR ± —

DRAFTSMAN	TRACER	L.D.& DRAFTSMAN
Meyer	B.M.R.	H.A.R.
CHECKER		CHIEF DRAFTSMAN
H.E. Johnson		

SUBMITTED:
H.A. Roe
ORD. DEPT. U.S.A.

APPROVED BY ORDER OF THE CHIEF OF ORDNANCE.
Walter J. Crook
COL., ORD. DEPT. U.S.A.

ORDNANCE DEPT., U. S. A.
MADE AT ROCK ISLAND ARSENAL

HEAT TREATMENT AND FINAL FINISH
- PHOSPHATE BLACK (SEE NOTE)

PHYSICAL PROPERTIES	
Y. P.	
T. S.	
EL. 2	
RED	
BR.	
ROCK.	
SCL.	

JUNE 1, 1934

REVISIONS			
12	4-19-43		

DRG. PERTAINS TO	
D7052	MOUNT, TRIPOD
	MACHINE GUN
	CAL. 30, M2

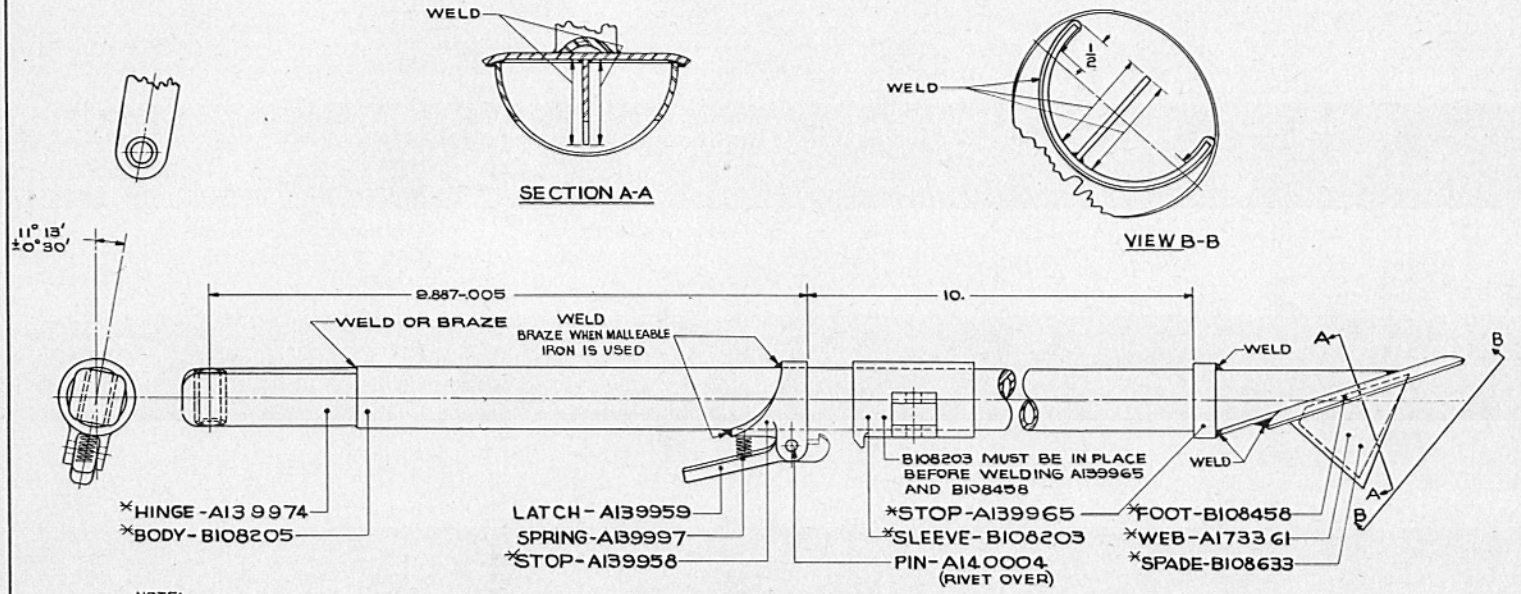

NOTE:
ASSEMBLE LATCH A-139959, SPRING A139997, AND PIN-A140004 AFTER APPLYING PHOSPHATE BLACK TO ASSEMBLY.

LEG, REAR, RIGHT, ASSEMBLY (C-59337-2

*WILL NOT BE ISSUED FOR FIELD MAINTENANCE EXCEPT AS COMPONENTS OF AUTHORIZED ASSEMBLIES

0 1 2 3 4 5 6 7 8 9 10 11 INCHES

RETRACED FROM OLD TRACING WITHOUT CHANGE 9-29-43

FOR ALTERNATIVE CONSTRUCTION SEE C59337A AND C59337B

C59337

TOLERANCE ON DIMENSIONS NOT OTHERWISE SPECIFIED
DECIMAL ±
FRACTIONAL ± 1/32
ANGULAR ±

DRAFTSMAN	TRACER	L.D.D. DRAFTSMAN
W.L.	H.N.S.	A.H.R.
CHECKER		CHIEF DRAFTSMAN

SUBMITTED: A.H. Roe

APPROVED BY ORDER OF THE CHIEF OF ORDNANCE
CAPT. ORD. DEPT. U.S.A.

ORDNANCE DEPT., U. S. A.

MADE AT ROCK ISLAND ARSENAL

HEAT TREATMENT AND FINAL FINISH
PHOSPHATE BLACK

PHYSICAL PROPERTIES	
Y. P.	
T. S.	
EL. 2	
RED	
BR.	
ROCK.	
SCL.	

JUNE 1, 1943 REVISIONS			
9	9-27-43		

DRG. PERTAINS TO	
D7052	MOUNT, TRIPOD
	MACHINE GUN
	CAL. .30, M2

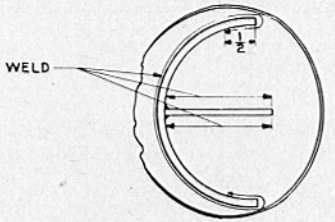

VIEW A-A

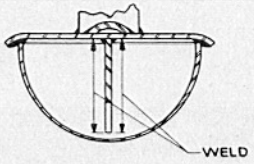

SECTION B-B

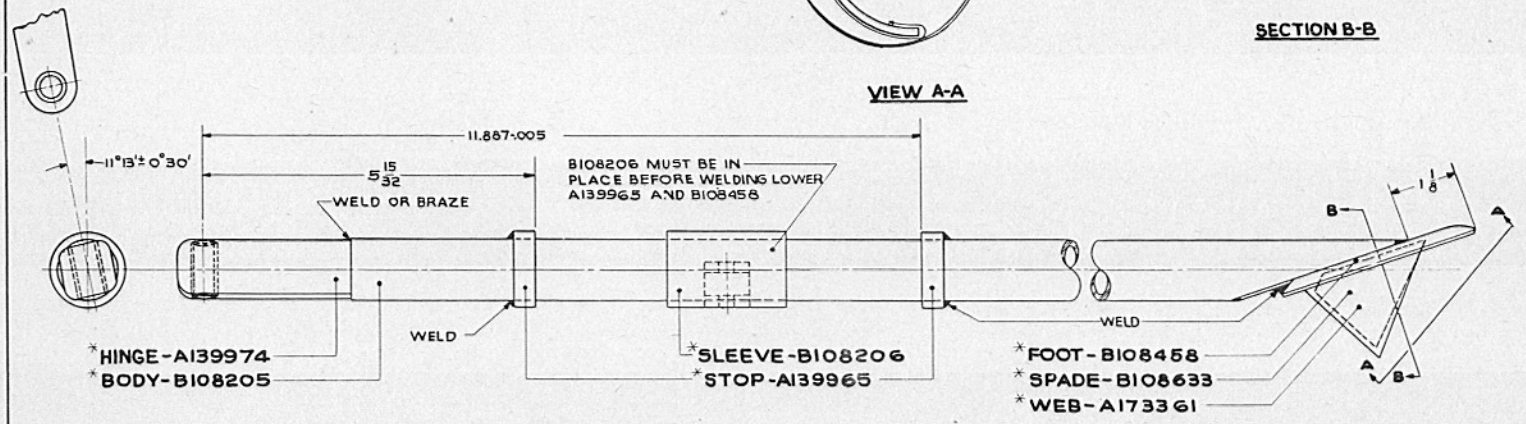

LEG, REAR, LEFT, ASSEMBLY

C59338-1

*WILL NOT BE ISSUED FOR FIELD MAINTENANCE EXCEPT AS COMPONENTS OF AUTHORIZED ASSEMBLIES

NOTE:
FOR ALTERNATIVE CONSTRUCTION SEE C59338A AND C59338B

TOLERANCE ON DIMENSIONS NOT OTHERWISE SPECIFIED
DECIMAL ±
FRACTIONAL ± 1/32
ANGULAR °

DRAFTSMAN	TRACER	U.S. DRAFTSMAN
F.W.S.	H.N.S.	
CHECKER	U.S.	CHIEF DRAFTSMAN

SUBMITTED:
H. H. Rose
ORD. DEPT. U. S. A.

APPROVED BY ORDER OF THE CHIEF OF ORDNANCE
Geo. G. Thurlow
ORD. DEPT. U. S. A.

ORDNANCE DEPT., U. S. A.
MADE AT ROCK ISLAND ARSENAL

SUPERSEDES OLD TRACING C59338
UNDER REV. DATE OF 9-27-43

0 1 2 3 4 5 6 7 8 9 10 11 INCHES

C59338

HEAT TREATMENT AND FINAL FINISH

PHYSICAL PROPERTIES	
Y. P.	
T. S.	
EL. 2	
RED	
BR.	
ROCK	
SCL.	

AUGUST 22, 1940

REVISIONS

5	3-16-42
6	7-10-42
7	3-26-43
8	5-20-43
9	4-3-44

DRG. PERTAINS TO

D7052	MT, TRIPOD, M.G
	CAL. .30, M 2

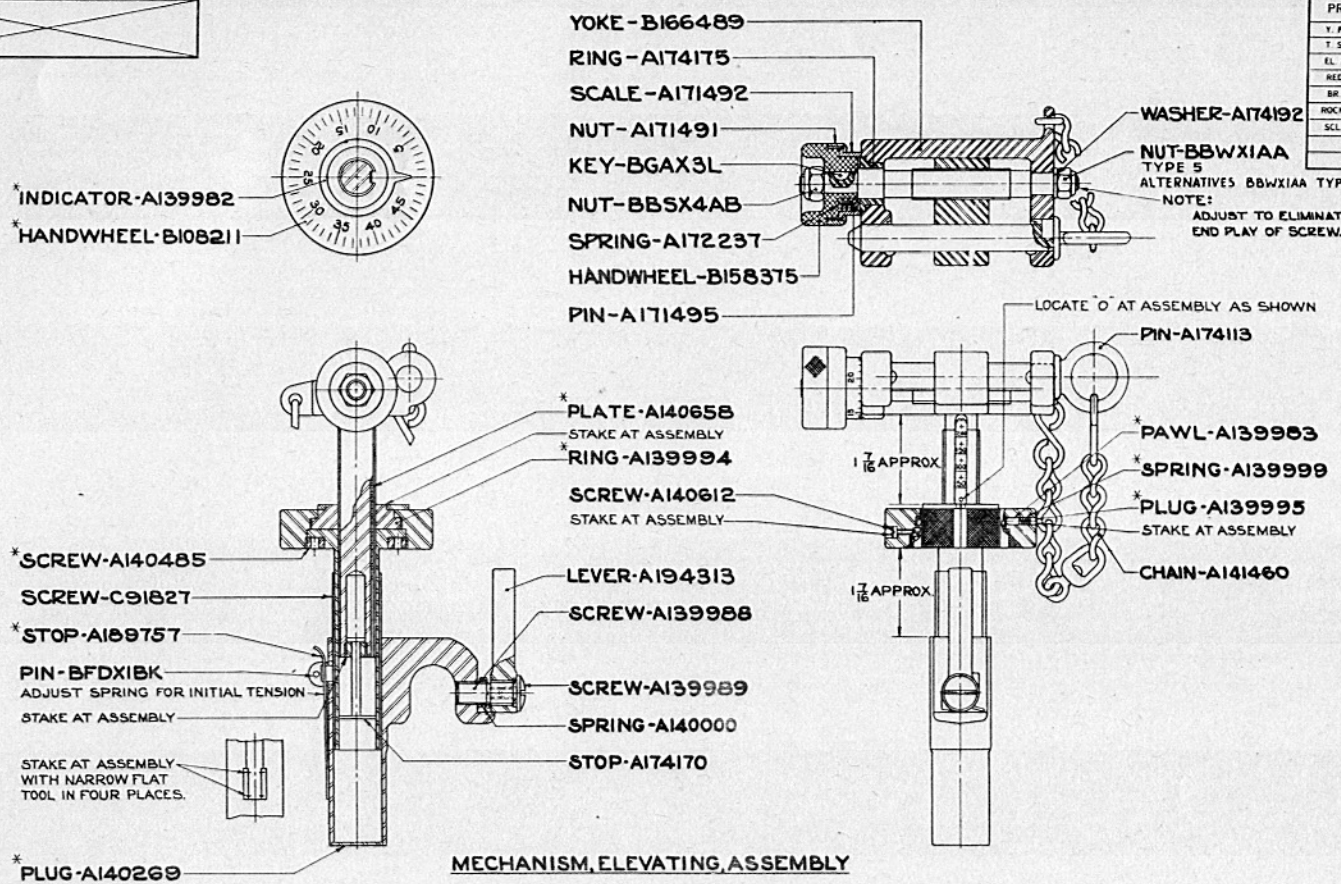

MECHANISM, ELEVATING, ASSEMBLY

*WILL NOT BE ISSUED FOR FIELD MAINTENANCE EXCEPT AS COMPONENTS OF AUTHORIZED ASSEMBLIES.

SUPERSEDES OLD TRACING C74620
UNDER REV. DATE OF MARCH 16, 1942

0 1 2 3 4 5 6 7 8 9 10 11 INCHES

C74620

DRAFTSMAN	TRACER	L.B.G. DRAFTSMAN
RKB	RKB	AHR
CHECKER		CHIEF DRAFTSMAN
L.M.D.		

SUBMITTED:

APPROVED BY ORDER OF THE CHIEF OF ORDNANCE

ORDNANCE DEPT., U. S. A.

MADE AT ROCK ISLAND ARSENAL

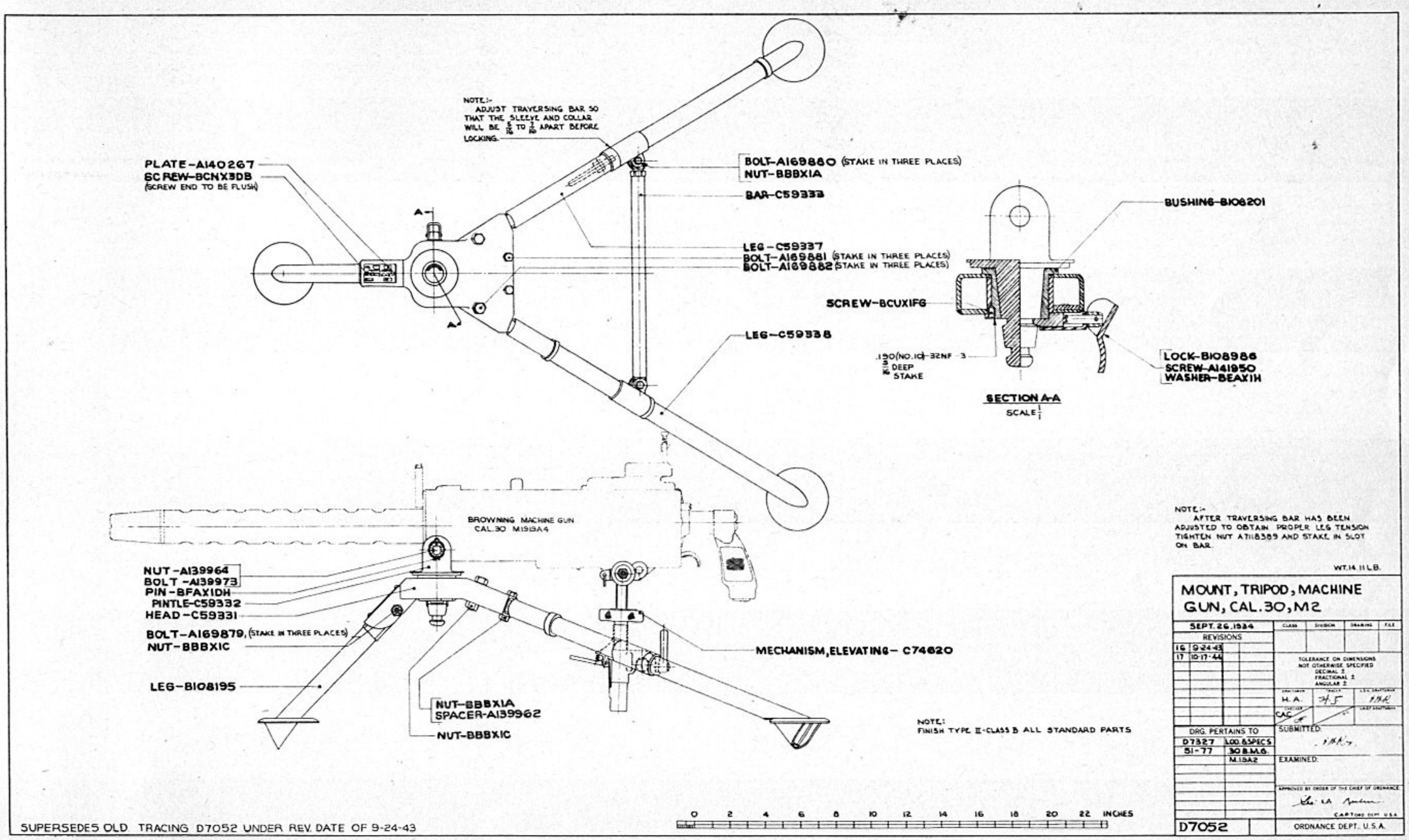
NOTE:-
ADJUST TRAVERSING BAR SO THAT THE SLEEVE AND COLLAR WILL BE 5/16 TO 7/16 APART BEFORE LOCKING.
PLATE-A140267
SCREW-BCNX3DB
(SCREW END TO BE FLUSH)
BOLT-A169880 (STAKE IN THREE PLACES)
NUT-BBBX1A
BAR-C59333
LEG-C59337
BOLT-A169881 (STAKE IN THREE PLACES)
BOLT-A169882 (STAKE IN THREE PLACES)
LEG-C59338
BUSHING-B108201
SCREW-BCUX1FG
.190(NO.10)-32NF-3
3/16 DEEP STAKE
LOCK-B108986
SCREW-A141950
WASHER-BEAX1H
SECTION A-A
SCALE 1/1
BROWNING MACHINE GUN
CAL.30 M1919A4
NUT-A139964
BOLT-A139973
PIN-BFAX1DH
PINTLE-C59332
HEAD-C59331
BOLT-A169879, (STAKE IN THREE PLACES)
NUT-BBBX1C
LEG-B108195
NUT-BBBX1A
SPACER-A139962
NUT-BBBX1C
MECHANISM, ELEVATING- C74620
NOTE:-
AFTER TRAVERSING BAR HAS BEEN ADJUSTED TO OBTAIN PROPER LEG TENSION TIGHTEN NUT A7118389 AND STAKE IN SLOT ON BAR.
WT.14.11 LB.
NOTE:
FINISH TYPE II-CLASS B ALL STANDARD PARTS
0 2 4 6 8 10 12 14 16 18 20 22 INCHES
MOUNT, TRIPOD, MACHINE GUN, CAL.30, M2
SEPT. 26, 1934
REVISIONS
16 9-24-43
17 10-17-44
CLASS
DIVISION
DRAWING
FILE
TOLERANCE ON DIMENSIONS NOT OTHERWISE SPECIFIED
DECIMAL ±
FRACTIONAL ±
ANGULAR ±
H. A.
CAC
DRG. PERTAINS TO
D7327 LOD. & SPECS
51-77 30 B.M.G.
M.19A2
SUBMITTED:
EXAMINED:
APPROVED BY ORDER OF THE CHIEF OF ORDNANCE
CAPT ORD DEPT U.S.A.
D7052
ORDNANCE DEPT. U.S.A.
SUPERSEDES OLD TRACING D7052 UNDER REV. DATE OF 9-24-43